GM Headlight Switch Connections

Details for Front Parking Lights that stay On with Headlights

(*** This diagram applies to Roadster-18 Kits only ***)

© 2014

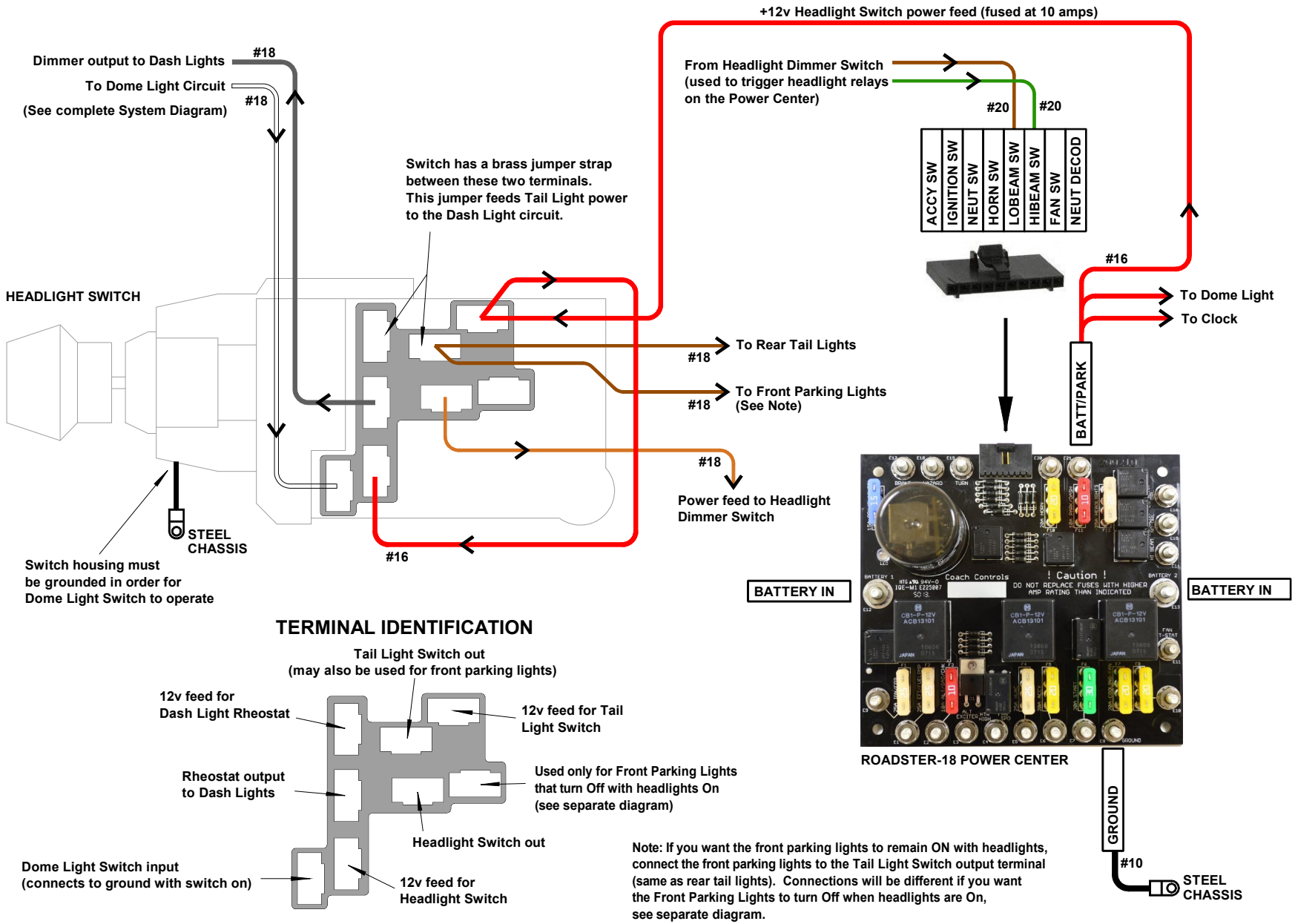

TERMINAL IDENTIFICATION

Note: If you want the front parking lights to remain ON with headlights, connect the front parking lights to the Tail Light Switch output terminal (same as rear tail lights). Connections will be different if you want the Front Parking Lights to turn Off when headlights are On, see separate diagram.