Typical Keyless Entry System
Connections to Coach-1 Power Center
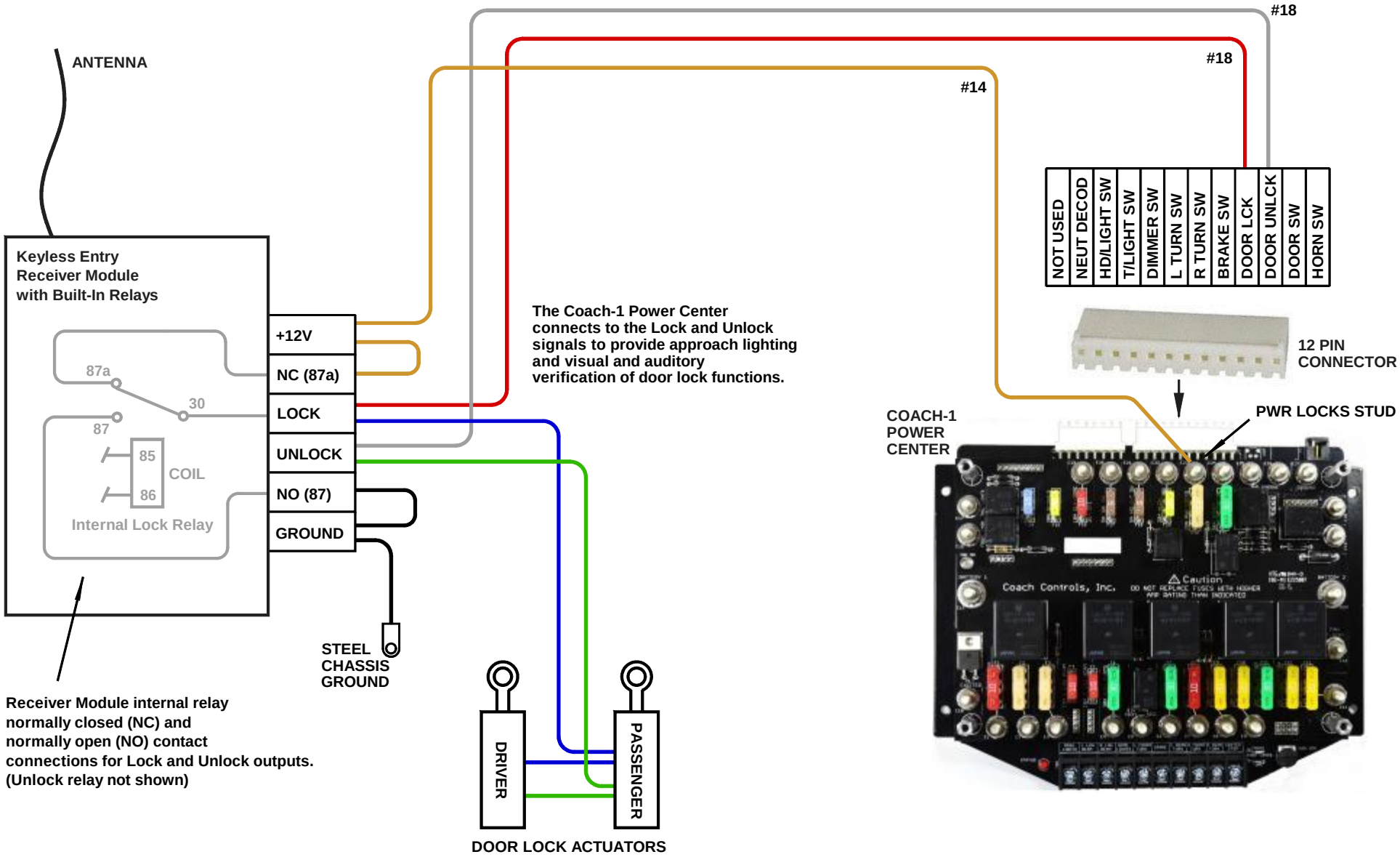
© 2016